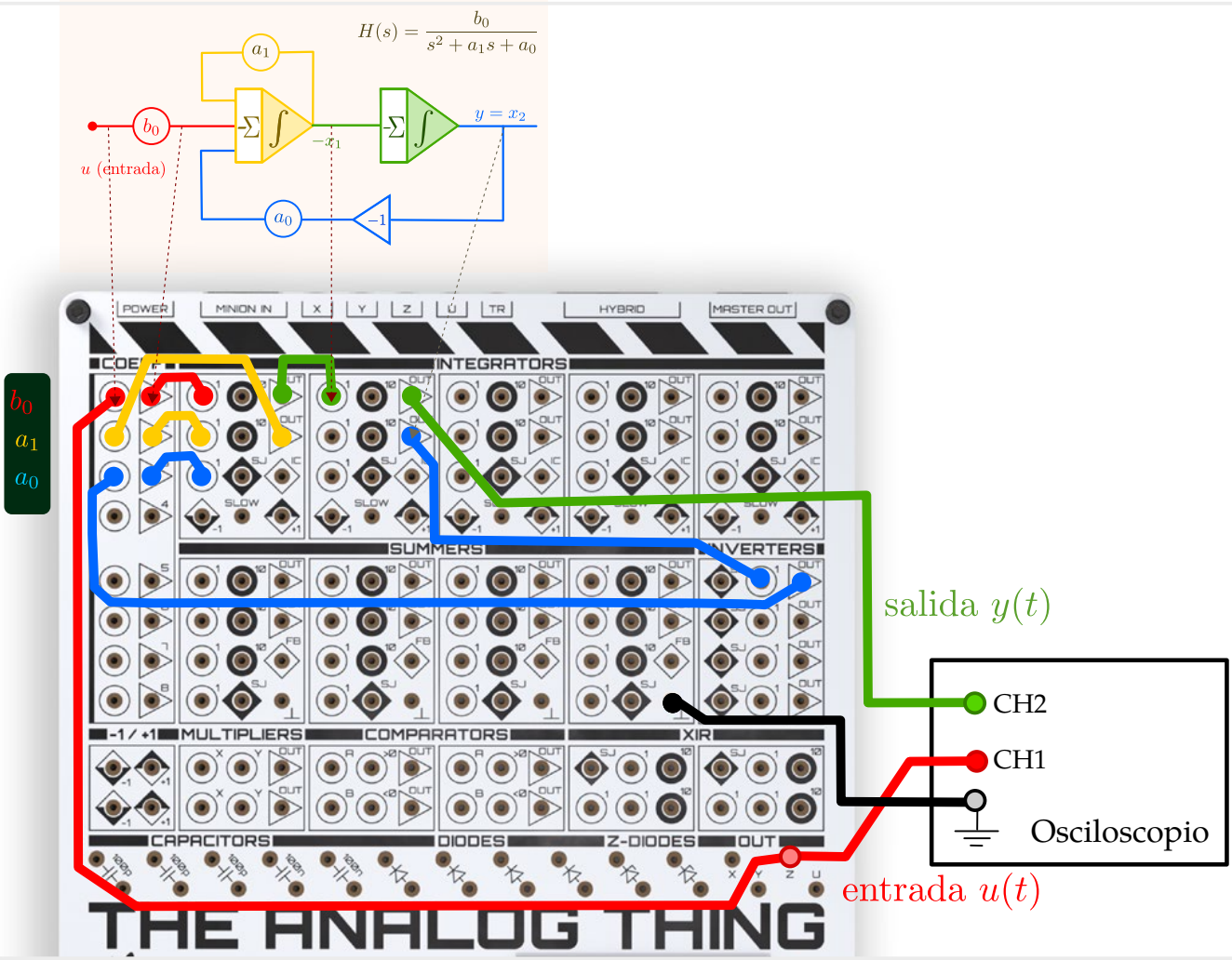
$H(s) = \frac{b_0}{s^2 + a_1 s + a_0}$
a_1
b_0
u (entrada)
$-x_1$
$y = x_2$
a_0
-1
b_0
a_1
a_0
POWER
MINION IN
X
Y
Z
U
TR
HYBRID
MASTER OUT
INTEGRATORS
SUMMERS
INVERTERS
MULTIPLIERS
COMPARATORS
XIR
CAPACITORS
DIODES
Z-DIODES
OUT
THE ANALOG THING
salida $y(t)$
CH2
CH1
Osciloscopio
entrada $u(t)$